CHANNEL VISION
Limited Warranty

Channel Vision Technology will repair or replace any defect in material or workmanship which occurs during normal use of this product with new or rebuilt parts, free of charge in the USA, for two years from the date of original purchase. This is a no hassle warranty with no mail in warranty card needed. This warranty does not cover damages in shipment, failures caused by other products not supplied by Channel Vision Technology, or failures due to accident, misuse, abuse, or alteration of the equipment. This warranty is extended only to the original purchaser, and a purchase receipt, invoice, or other proof of original purchase date will be required before warranty repairs are provided.

Mail in service can be obtained during the warranty period by calling (800) 840-0288 toll free. A Return Authorization number must be obtained in advance and can be marked on the outside of the shipping carton.

This warranty gives you specific legal rights and you may have other rights (which vary from state to state). If a problem with this product develops during or after the warranty period, please contact Channel Vision Technology, your dealer or any factory-authorized service center.

500-055

CHANNEL VISION™
Central

Model C-0217

Starter module

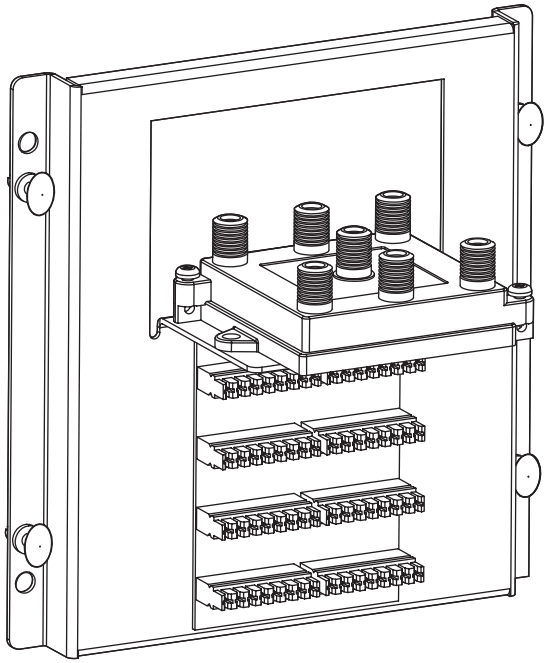

CHANNEL VISION™
234 FISCHER AVENUE • COSTA MESA, CA 92626
(714) 424-6500 • (800) 840-0288 • (714) 424-6510 fax
www.channelvision.com • email: sales@channelvision.com

© 2004, CHANNEL VISION™

Model C-0217

Starter module

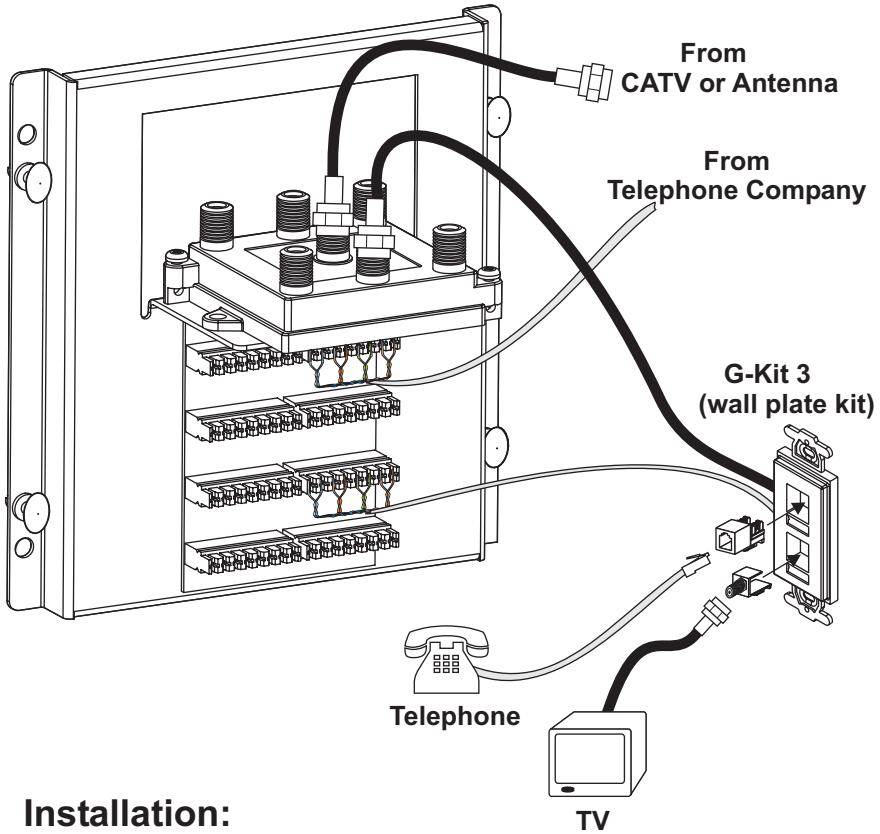

Installation:

- Punch down as many as 4 incoming telephone lines on any of the 110 punch down connectors.
- Connect RF signal from your cable company or a rooftop antenna (see diagram).
- Connect the telephone and RF outputs to wall plates in each room (see diagram).
- Connect TV and telephone to wall plates.

Installation Tip

1. **Align cable according to the color code shown**
2. **Use a standard 110 punch tool Note: Don't use a screwdriver as it will damage the connector.**

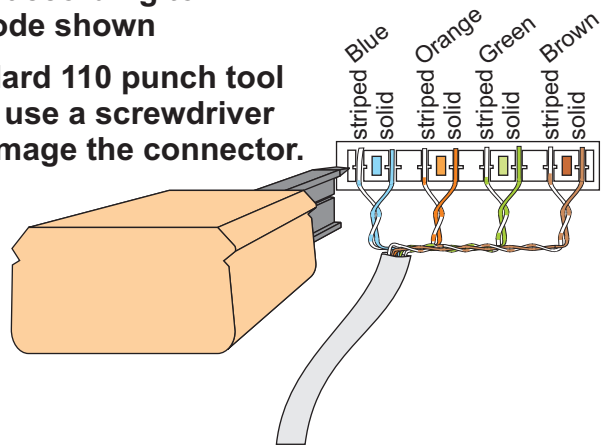

Features:

Compact Design

Simple connections

DC power passing 6-way RF splitter

Telephone distribution to 7 locations

Specifications:

RF Insertion loss:	10 dB (typical)
RF Bandwidth:	5-1000MHz
RF inputs:	1 (DC passing)
RF outputs:	6 (DC passing)
110 connectors:	8 (all bridged)
Dimensions:	6.50" L x 6.38" W x 2.83" D